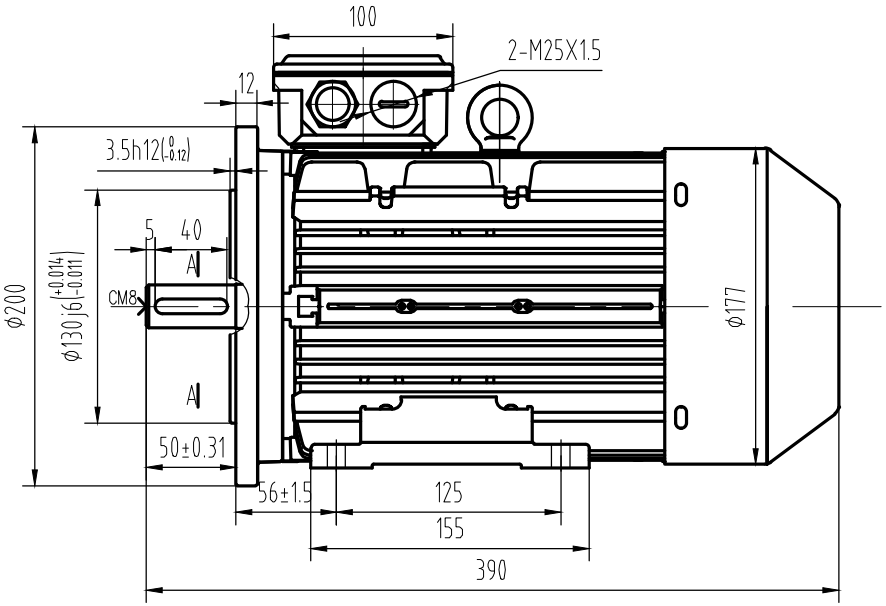

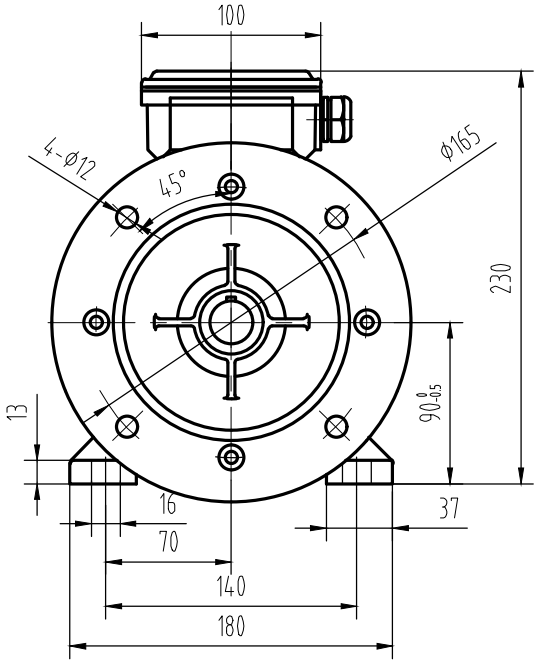

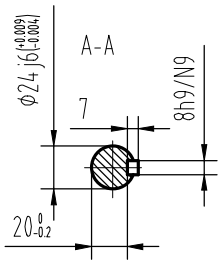

Mark	No.	Zone	Changed file No.	Signatuce	Data

Design			Standard		
Check					
Auditing					
Technics			Approvil		

Sign	Weight	Scale
		1:3.5
Total page	page No.	

OMA3-090L0-02~08P B35

Wuxi OMEC LTD.